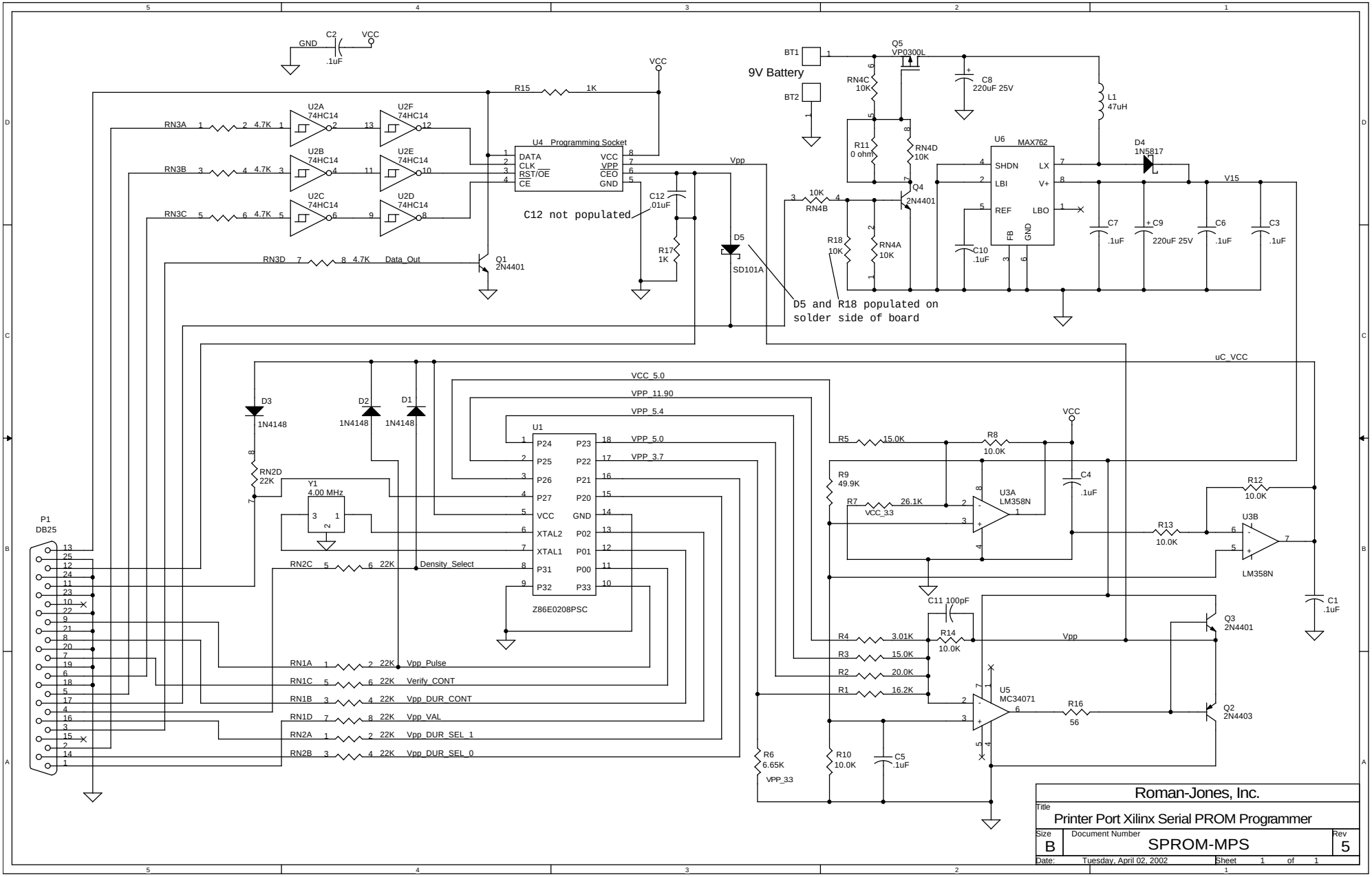

Roman-Jones, Inc.

Title: Printer Port Xilinx Serial PROM Programmer

Size: B | Document Number: SPROM-MPS | Rev: 5

Date: Tuesday, April 02, 2002 | Sheet 1 of 1